SOH-215-[L]

Wall Mounted 3 Hole Cast Spout Bath Set 220mm

THE WATER / MONOPOLY

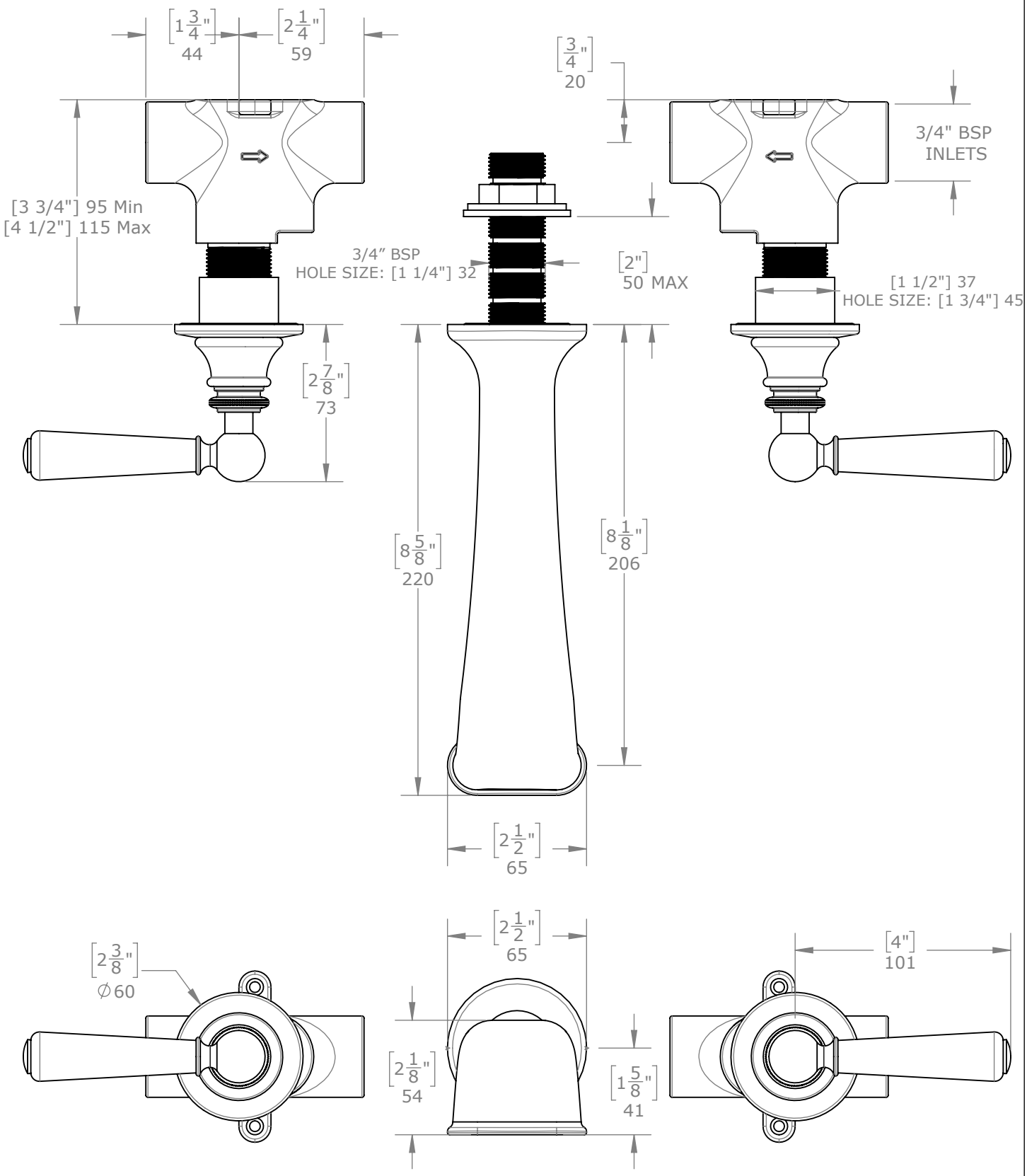

Spout and valve alignment may be inline or offset, subject to site and installation requirements

- LEVER OPTIONS:
[WL] = White Lever
[BL] = Black Lever
[WD] = Wood Lever
[ML] = Metal Lever

The Honey Factory,
69-71 Scrubs Lane,
London, NW10 6QU

+44 (0)20 7624 2636

info@thewatermonopoly.com